# DIMENSIONS BUMPER 3/4 - Ø180 X 400

**Blanc - *White* : ref. 38082 (gonflé / *inflated*)**
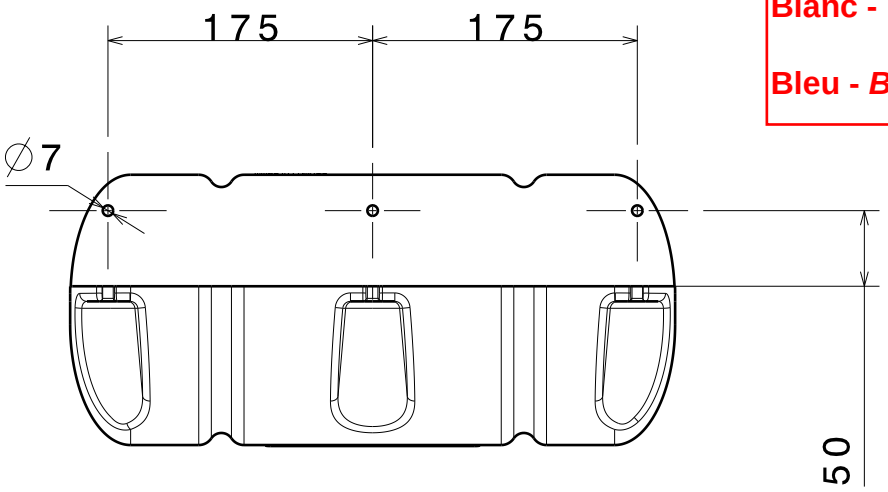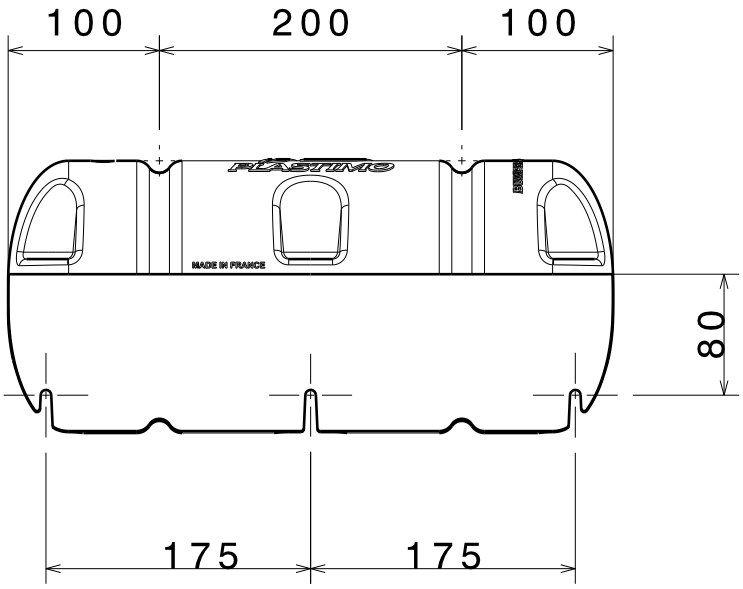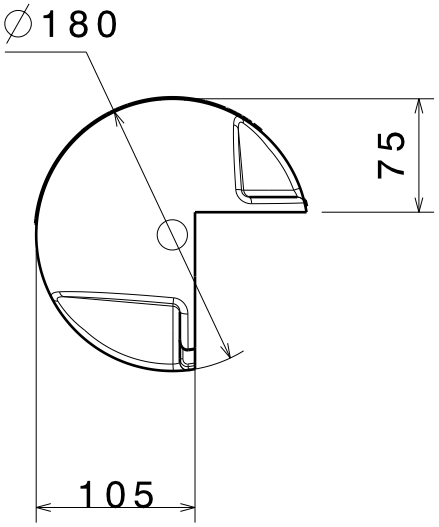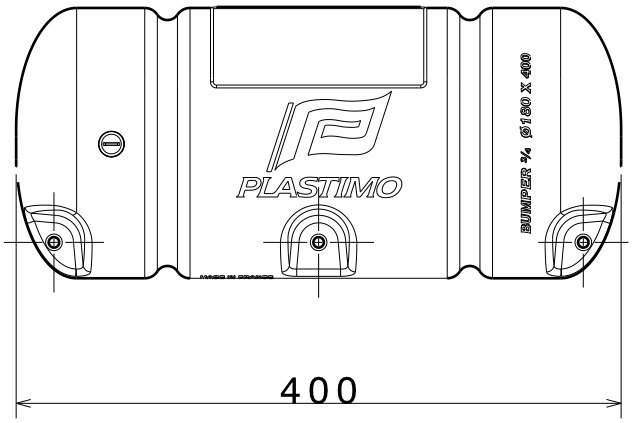
**Bleu - *Blue* : ref. 39357 (gonflé / *inflated*)**